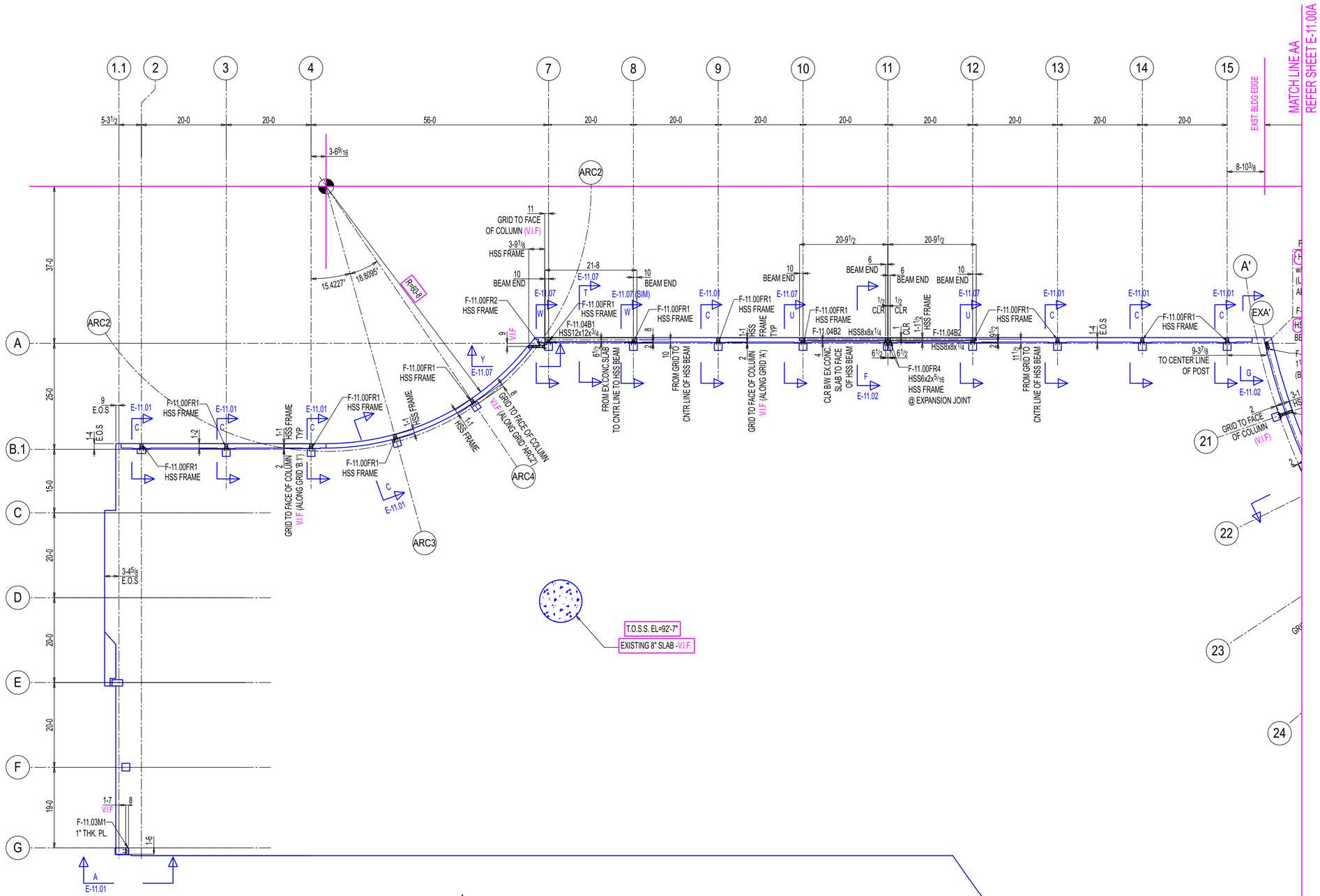

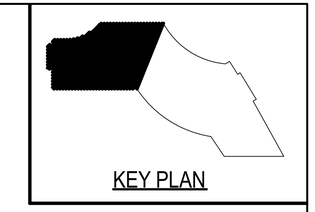

NEW SLAB EXTENSION SUPPORT FRAMING PLAN LEVEL-05

(REF: S110,1/A055)

NOTE:
1. ALL SLAB EXTENSION SUPPORT HSS FRAMES ARE FOR THE CENTER OF THE EXISTING CONCRETE COLUMN (U.N.O).
2. ALL SLAB EXTENSION SUPPORT FRAME SIZE IS HSS6x6x 5/16 (U.N.O).

PROJECT NORTH

General Notes

*Structural steel shall conform to ASTM-A992.
*Structural SQR/RND.tubing conform to ASTM A500 Grade C
*Pipe shall conform to ASTM A53, Grade B.
*Channels, Angles and plates shall conform to A36.
*All bolts shall be 3/4" High strength in accordance with ASTM A325 (UNO)
*Welding Electrodes for Carbon steel :E70xx

# of Copies	Revision/ Issue	Destination	Date
5	0	For Construction	11-14-2025
4	D	For Re-Approval	10-24-2025
3	C	For Re-Approval	09-19-2025
2	B	For Re-Approval	06-23-2025
1	A	For Approval	02-25-2025

IRON FABRICATION SERVICES, LLC.

3029 M. Street, NW, Suite 202
Washington, DC 20007
Tel: 202-800-5599
Fax: 202-478-0303

Project Name and Address
MARYLAND AVENUE

Location: **1250 MARYLAND AVENUE SW WASHINGTON, DC 20024**

Contractor:
BALFOUR BEATTY

Approved for Fabrication by:	Signature

Contract # **224009** Drawing # **E-11.00**

Contract Item: **LEVEL-05 SLAB EXTENSION**

Ref: **SOW-11: (S110,1/A055)**

Date **01/ 20/ 2025**

Scale VARIES

Drawing Title: **SOW #11 LEVEL-05 NEW SLAB EXTENSION SUPPORT FRAMING PLAN**

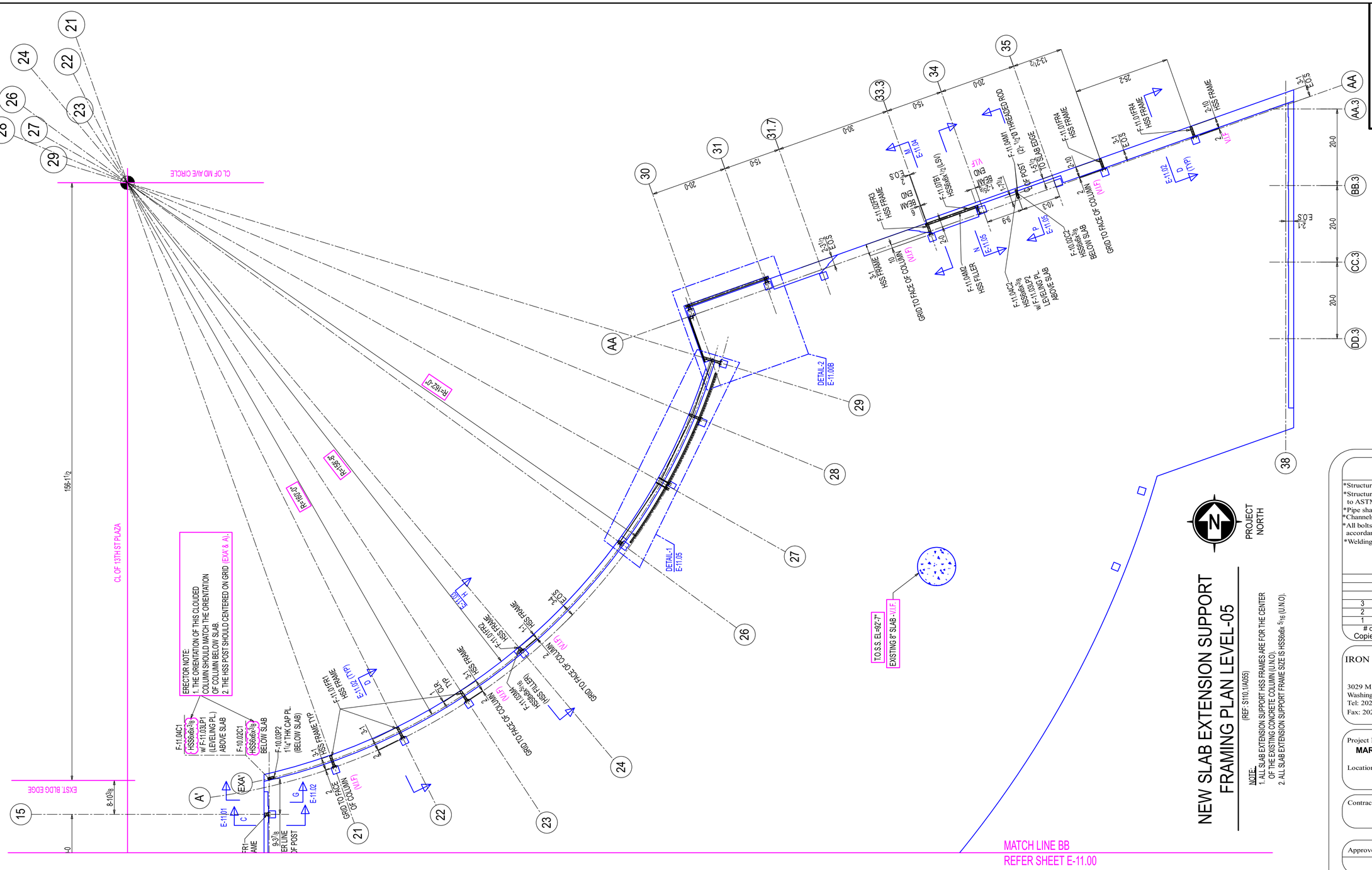

General Notes

*Structural steel shall conform to ASTM-A992.
*Structural SQR/RND.tubing conform to ASTM A500 Grade C
*Pipe shall conform to ASTM A53, Grade B.
*Channels, Angles and plates shall conform to A36.
*All bolts shall be 3/4" High strength in accordance with ASTM A325 (UNO)
*Welding Electrodes for Carbon steel :E70xx

# of Copies	Revision/ Issue	Destination	Date
3	0	For Construction	11-14-2025
2	B	For Re-Approval	10-24-2025
1	A	For Approval	09-19-2025

IRON FABRICATION SERVICES, LLC.

3029 M. Street, NW, Suite 202
Washington, DC 20007
Tel: 202-800-5599
Fax: 202-478-0303

Project Name and Address
MARYLAND AVENUE

Location: **1250 MARYLAND AVENUE SW WASHINGTON, DC 20024**

Contractor:
BALFOUR BEATTY

Approved for Fabrication by:	Signature

Contract # **224009**
Drawing # **E-11.00A**

Contract Item: **LEVEL-05 SLAB EXTENSION**

Ref: **SOW-11: (S110,1/A055)**

Date **01/ 20/ 2025**

Scale VARIES

Drawing Title: **SOW #11 LEVEL-05 NEW SLAB EXTENSION SUPPORT FRAMING PLAN**

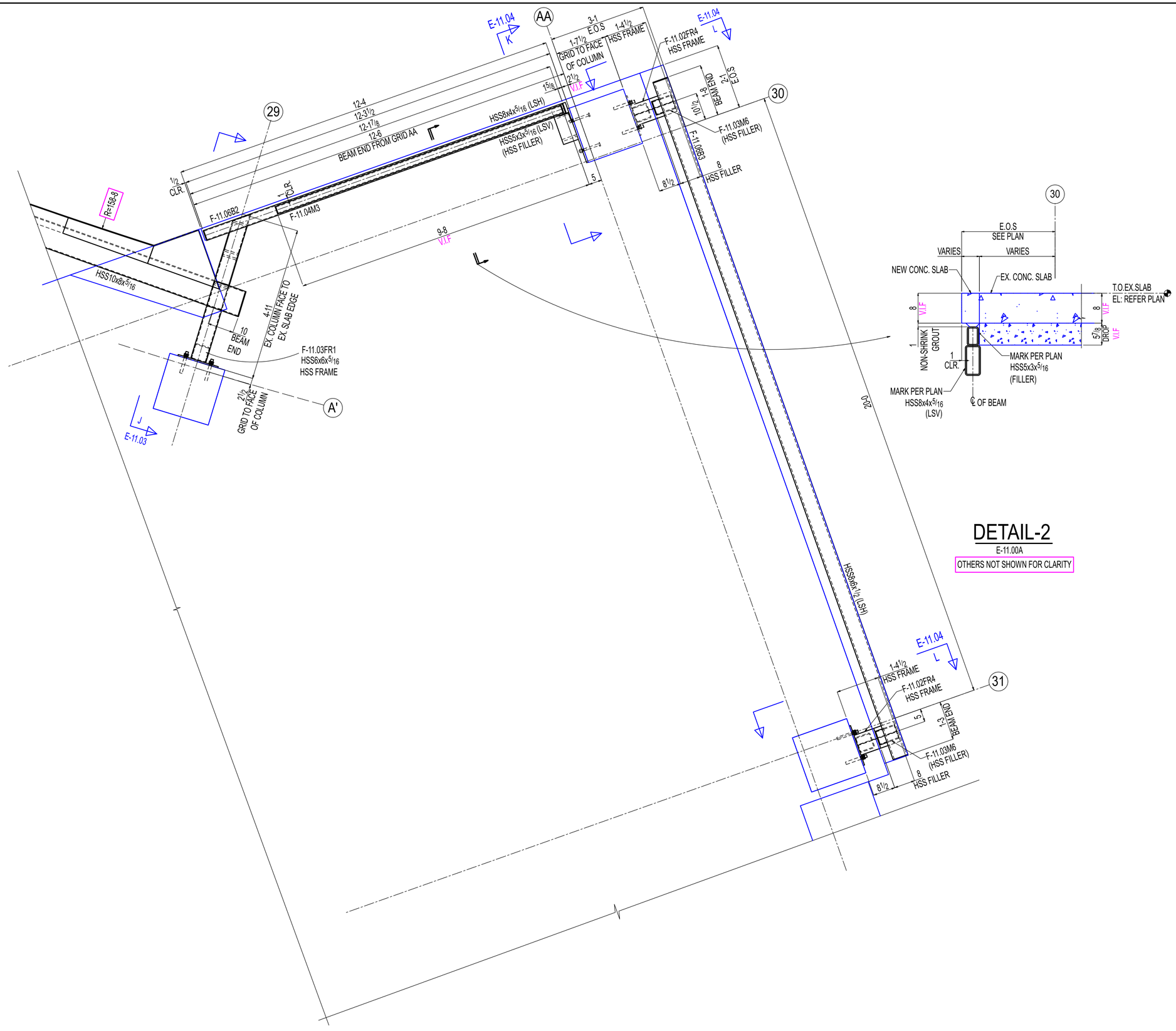

DETAIL-2

E-11.00A

OTHERS NOT SHOWN FOR CLARITY

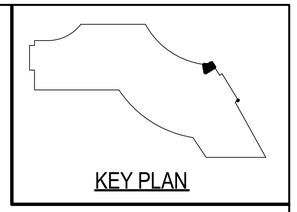

General Notes

*Structural steel shall conform to ASTM-A992.
*Structural SQR/RND.tubing conform to ASTM A500 Grade C
*Pipe shall conform to ASTM A53, Grade B.
*Channels, Angles and plates shall conform to A36.
*All bolts shall be ¾" High strength in accordance with ASTM A325 (UNO)
*Welding Electrodes for Carbon steel :E70xx

# of Copies	Revision/ Issue	Destination	Date
1	0	For Construction	11-14-2025

IRON FABRICATION SERVICES, LLC.

3029 M. Street, NW, Suite 202
Washington, DC 20007
Tel: 202-800-5599
Fax: 202-478-0303

Project Name and Address
MARYLAND AVENUE

Location: **1250 MARYLAND AVENUE SW WASHINGTON, DC 20024**

Contractor:
BALFOUR BEATTY

Approved for Fabrication by:	Signature

Contract # **224009** Drawing # **E-11.00B**

Contract Item: **LEVEL-05 SLAB EXTENSION**

Ref: **SOW-11: (S110,1/A055)**

Date **01/ 20/ 2025**

Scale VARIES

Drawing Title: **SOW #11 LEVEL-05 DETAIL VIEW**

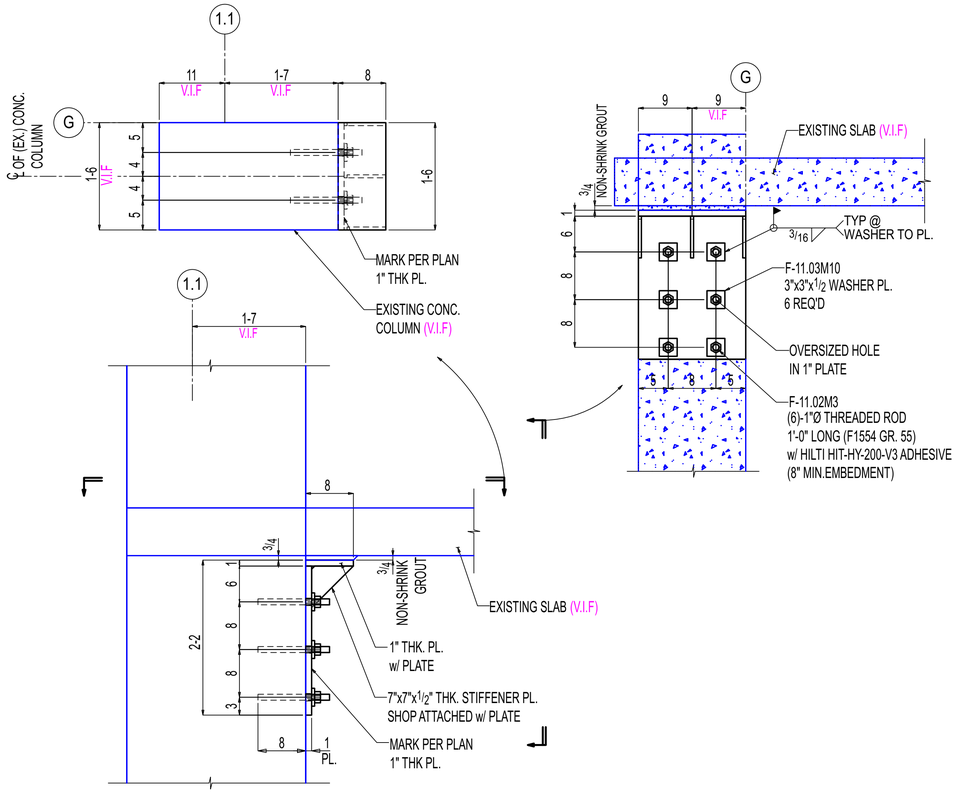

A-A

E-11.00
(REF: 4/S317)

OTHERS NOT SHOWN FOR CLARITY

NOTE:
1. DO NOT CUT EXISTING REBAR WHEN DRILLING FOR NEW BOLTS. GPR CONCRETE TO LOCATE REBAR PRIOR TO FINAL STEEL FABRICATION AND DRILLING. SPACING OF HOLES SHALL BE COORDINATED BY CONTRACTOR WITH RGA FOR EXISTING FIELD CONDITIONS.
2. INSTALL WASHER PLATE SO TOP OF THREADED ROD IS IN BEARING WITH WASHER PRIOR TO WELDING AND NON-SHRINK GROUT PLACEMENT.
3. AFTER THREADED ROD IS INSERTED, PRESSURE INJECT DURAL 452LV OR APPROVED ALTERNATIVE FULL WIDTH OF COLUMN.

NOT IN USE

B-B

E-11.00

OTHERS NOT SHOWN FOR CLARITY

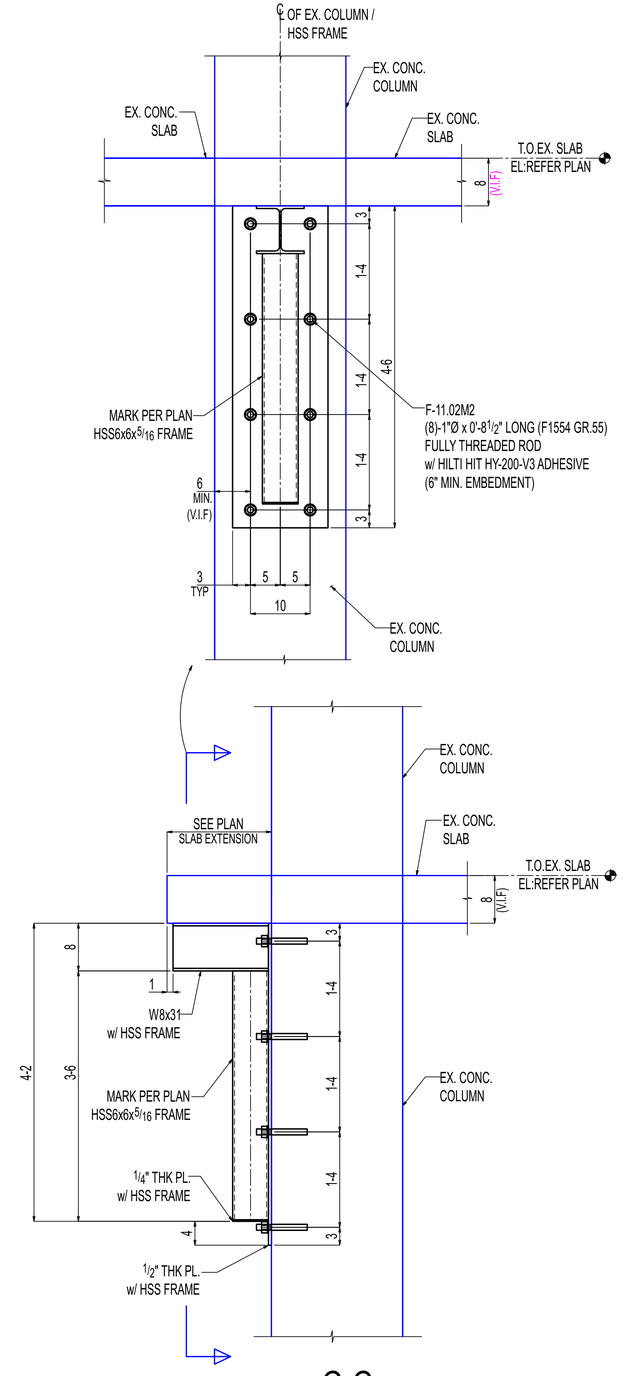

C-C

E-11.00
(REF:11/S314)

OTHERS NOT SHOWN FOR CLARITY

General Notes

*Structural steel shall conform to ASTM-A992.
*Structural SQR/RND.tubing conform to ASTM A500 Grade C
*Pipe shall conform to ASTM A53, Grade B.
*Channels, Angles and plates shall conform to A36.
*All bolts shall be 3/4" High strength in accordance with ASTM A325 (UNO)
*Welding Electrodes for Carbon steel :E70xx

# of Copies	Revision/ Issue	Destination	Date
5	0	For Construction	11-14-2025
4	D	For Re-Approval	10-24-2025
3	C	For Re-Approval	09-19-2025
2	B	For Re-Approval	06-23-2025
1	A	For Approval	02-25-2025

IRON FABRICATION SERVICES, LLC.

3029 M. Street, NW, Suite 202
Washington, DC 20007
Tel: 202-800-5599
Fax: 202-478-0303

Project Name and Address
MARYLAND AVENUE

Location: **1250 MARYLAND AVENUE SW WASHINGTON, DC 20024**

Contractor:
BALFOUR BEATTY

Approved for Fabrication by:	Signature

Contract # **224009**
Drawing # **E-11.01**

Contract Item: **LEVEL-05 SLAB EXTENSION**

Ref: **SOW-11: 3,4,5&6 / S307**

Date **01/ 20/ 2025**

Scale VARIES

Drawing Title: **SOW #11 LEVEL-05 NEW SLAB EXTENSION SUPPORT SECTIONS**

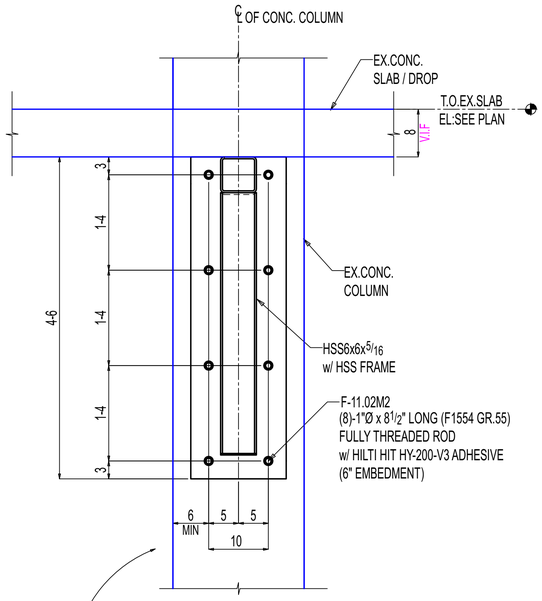

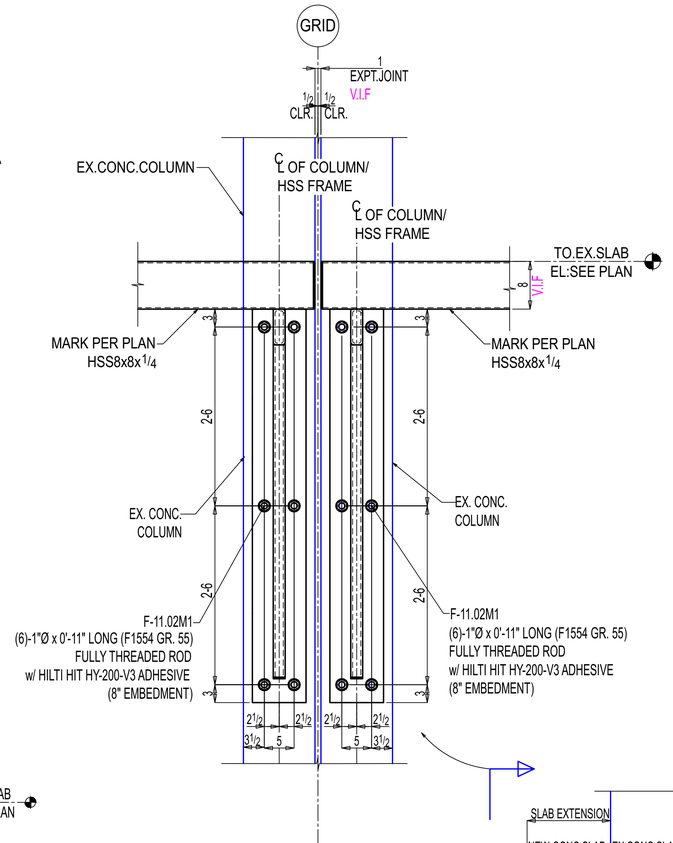

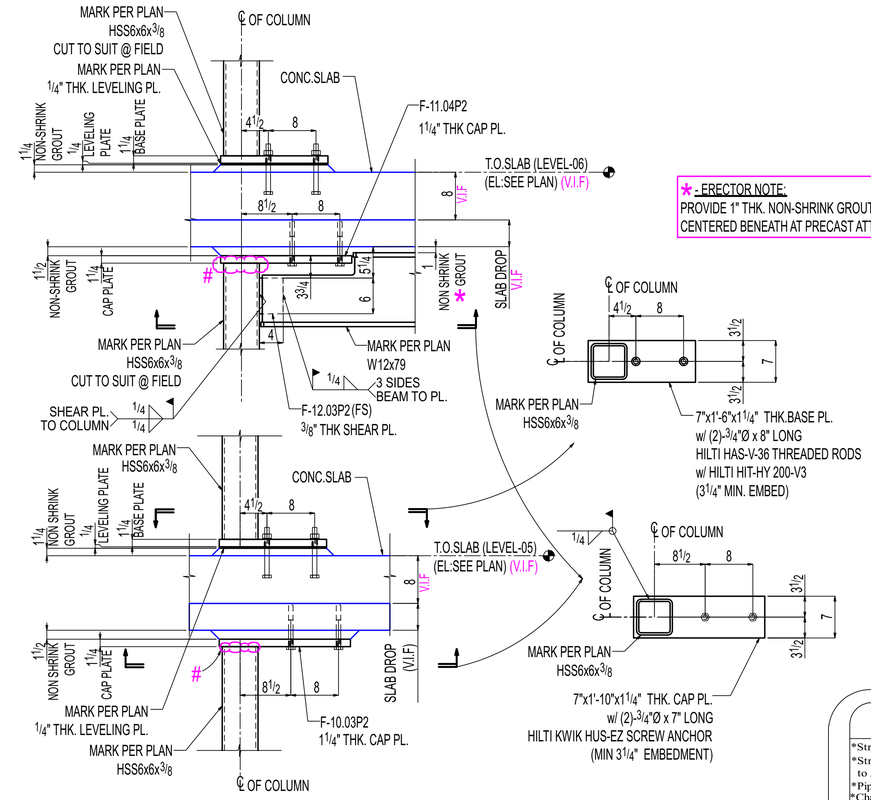

★ - ERECTOR NOTE:
PROVIDE 1" THK. NON-SHRINK GROUTx12" LONG
CENTERED BENEATH AT PRECAST ATTACHEMENT POINTS.

G-G

E-11.00
(REF:5,6 & 7/S314)

OTHERS NOT SHOWN FOR CLARITY

ERECTOR NOTE:
ALL # INDICATED COLUMN ENDS TO BE CUT TO SUIT @ FIELD
BASED ON FLOOR TO FLOOR CLEARENCE AND WELD IT TO THE CAP PLATE.

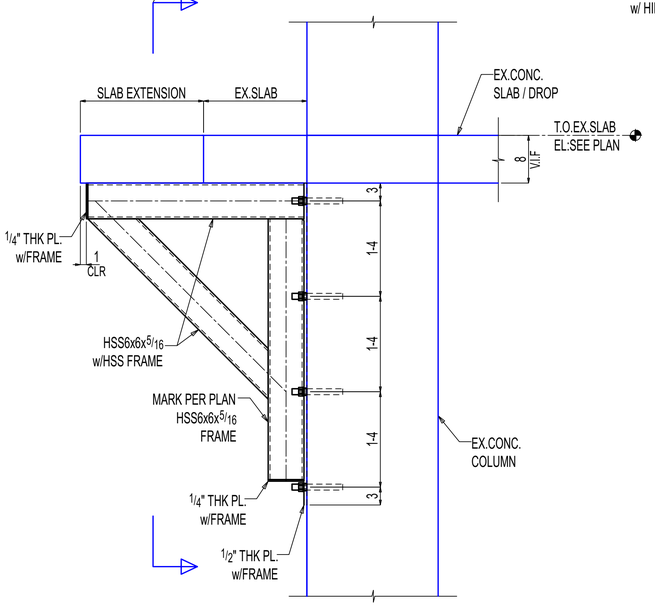

D-D

(NEW SLAB EXTENSION SUPPORT, 1'-6" to 3'-10")

E-11.00A
(REF:5/S307 & 6/S307)

OTHERS NOT SHOWN FOR CLARITY

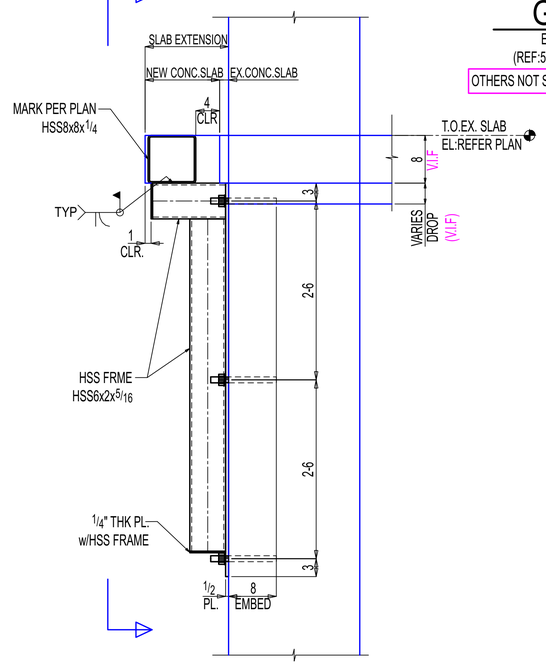

F-F

E-11.00
(REF:17/S205 & 18/S205)

OTHERS NOT SHOWN FOR CLARITY

SHOP / ERECTOR NOTE:
LOCATE EXISTING REBAR PRIOR TO FABRICATION OF PLATE.
DO NOT DRILL THROUGH REBAR.

General Notes

*Structural steel shall conform to ASTM-A992.
*Structural SQR/RND.tubing conform to ASTM A500 Grade C
*Pipe shall conform to ASTM A53, Grade B.
*Channels, Angles and plates shall conform to A36.
*All bolts shall be 3/4" High strength in accordance with ASTM A325 (UNO)
*Welding Electrodes for Carbon steel :E70xx

# of Copies	Revision/ Issue	Destination	Date
5	0	For Construction	11-14-2025
4	D	For Re-Approval	10-24-2025
3	C	For Re-Approval	09-19-2025
2	B	For Re-Approval	06-23-2025
1	A	For Approval	02-25-2025

IRON FABRICATION SERVICES, LLC.

3029 M. Street, NW, Suite 202
Washington, DC 20007
Tel: 202-800-5599
Fax: 202-478-0303

Project Name and Address
MARYLAND AVENUE

Location: **1250 MARYLAND AVENUE SW WASHINGTON, DC 20024**

Contractor:
BALFOUR BEATTY

Approved for Fabrication by:	Signature

Contract # **224009** Drawing # **E-11.02**

Contract Item: **LEVEL-05 SLAB EXTENSION**

Ref: **SOW-11: 3,4,5&6 / S307 & 11/S314**

Date **01/ 20/ 2025**

Scale VARIES

Drawing Title: **SOW #11 LEVEL-05 NEW SLAB EXTENSION SUPPORT SECTIONS**

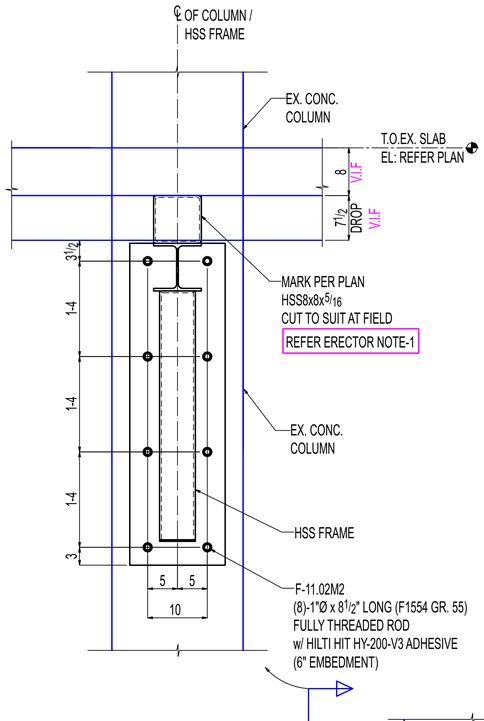

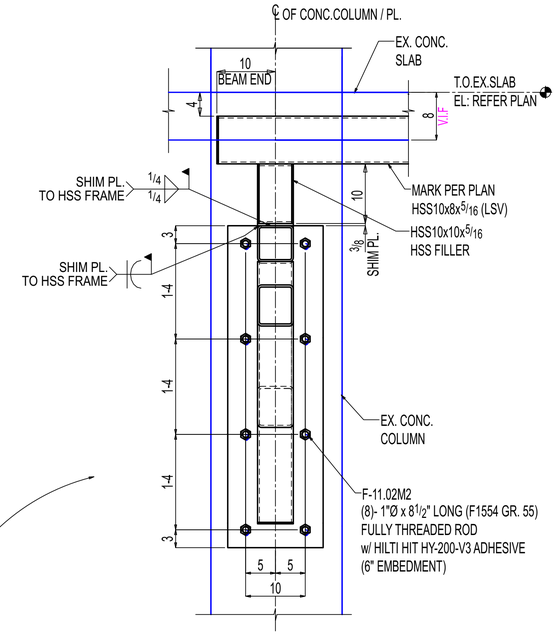

* -ERECTOR NOTE:
PROVIDE 1" NON -SHRINK GROUT x 12" LONG CENTERED BENEATH AT PRECAST ATTACHMENT POINTS.

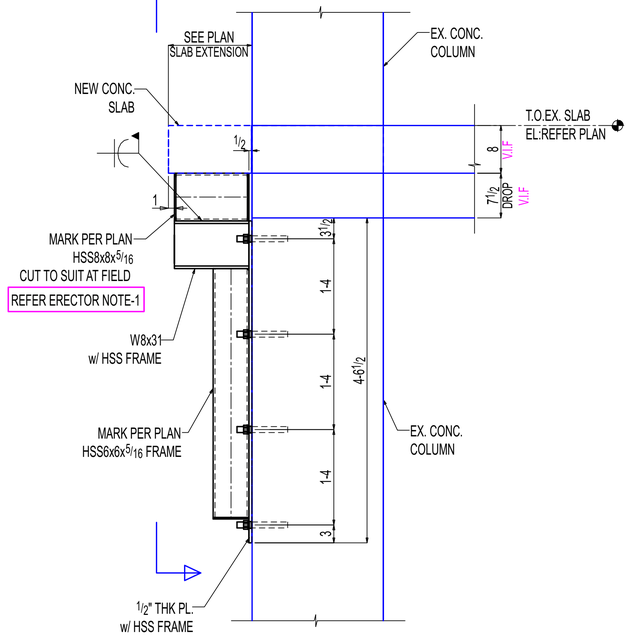

H-H

E-11.00A
(REF:10/S314)

OTHERS NOT SHOWN FOR CLARITY

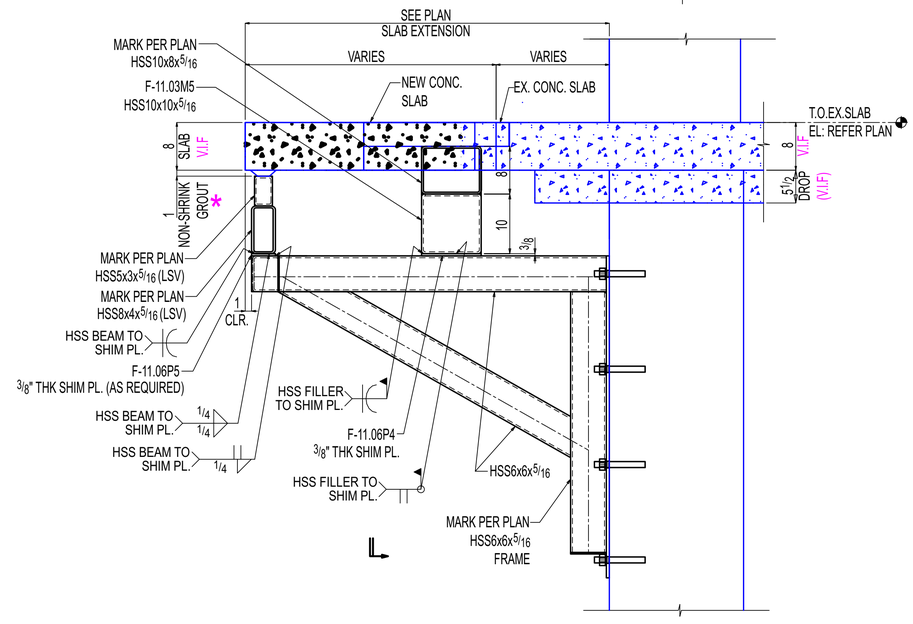

J-J

E-11.00B & E-11.05
(REF:6/S316)

OTHERS NOT SHOWN FOR CLARITY

SHOP / ERECTOR NOTE:
LOCATE EXISTING REBAR PRIOR TO FABRICATION OF PLATE.
DO NOT DRILL THROUGH REBAR.

ERECTOR NOTE-1:
ADJUST HSS FILLER DEPTH IN FIELD BY CUT THE HSS FILLER TO MATCH EXISTING SLAB DROP THICKNESS, AND WELD TO THE TOP OF HSS FRAME AT SITE PRIOR TO ERECTING THE HSS FRAME.

General Notes

*Structural steel shall conform to ASTM-A992.
*Structural SQR/RND.tubing conform to ASTM A500 Grade C
*Pipe shall conform to ASTM A53, Grade B.
*Channels, Angles and plates shall conform to A36.
*All bolts shall be 3/4" High strength in accordance with ASTM A325 (UNO)
*Welding Electrodes for Carbon steel :E70xx

# of Copies	Revision/ Issue	Destination	Date
4	0	For Construction	11-14-2025
3	C	For Re-Approval	10-24-2025
2	B	For Re-Approval	09-19-2025
1	A	For Approval	06-23-2025

IRON FABRICATION SERVICES, LLC.

3029 M. Street, NW, Suite 202
Washington, DC 20007
Tel: 202-800-5599
Fax: 202-478-0303

Project Name and Address
MARYLAND AVENUE

Location: **1250 MARYLAND AVENUE SW WASHINGTON, DC 20024**

Contractor:
BALFOUR BEATTY

Approved for Fabrication by:	Signature

Contract # **224009** Drawing # **E-11.03**

Contract Item: **LEVEL-05 SLAB EXTENSION**

Ref: **SOW-11: 3,4,5&6 / S307**

Date **01/ 20/ 2025**

Scale VARIES

Drawing Title: **SOW #11 LEVEL-05 NEW SLAB EXTENSION SUPPORT SECTIONS**

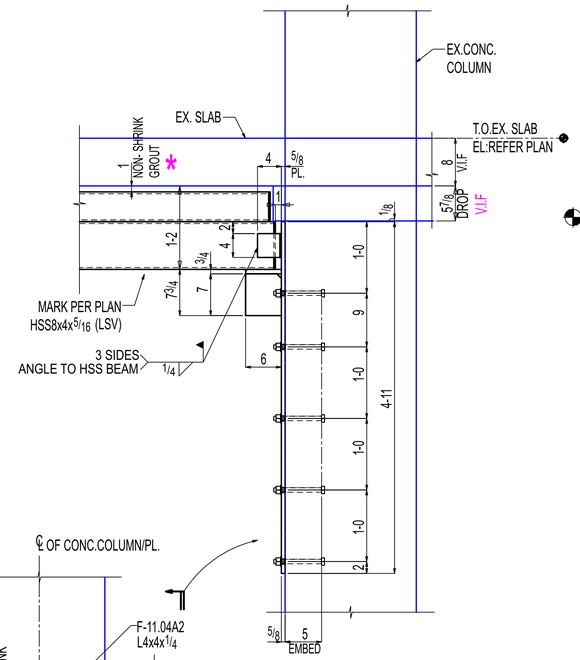

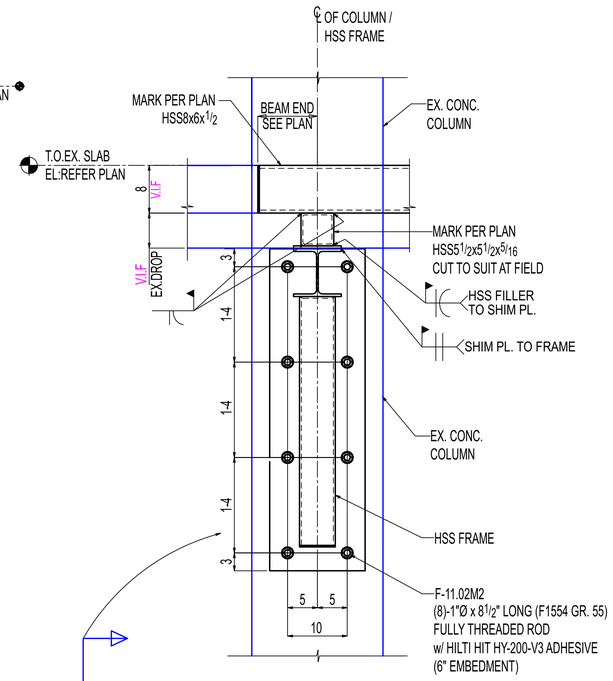

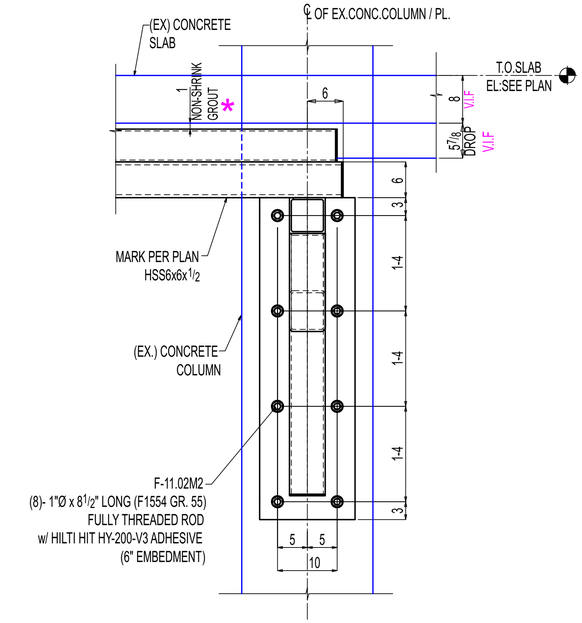

*- ERECTOR NOTE:
PROVIDE 1" NON-SHRINK GROUT x 12" LONG
CENTERED BENEATH AT PRECAST ATTACHMENT POINTS.

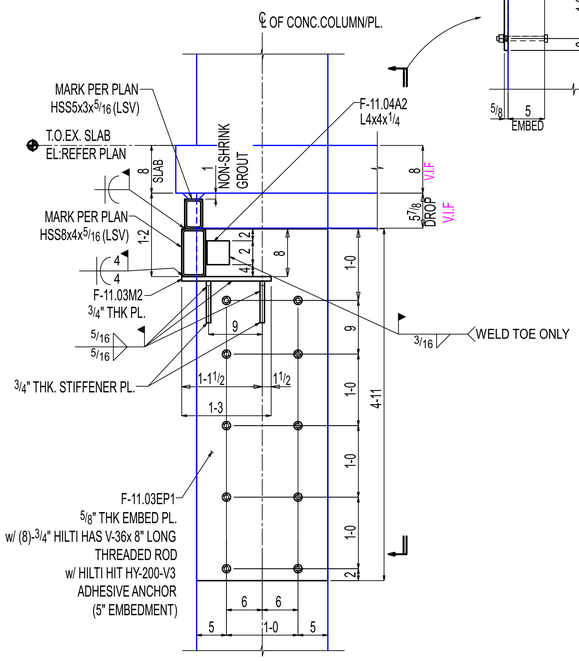

K-K

E-11.00B
(REF:1/S316)

OTHERS NOT SHOWN FOR CLARITY

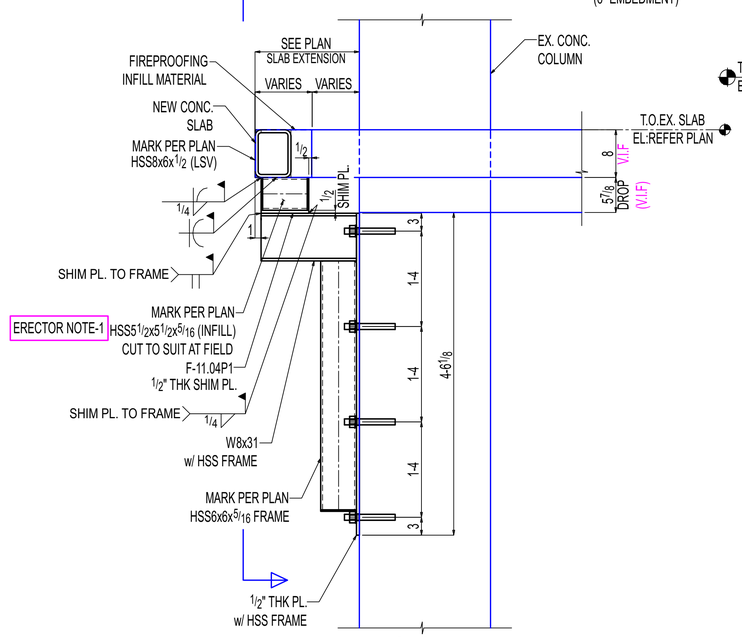

L-L

(NEW SLAB EXTENSION SUPPORT
@ SLAB DROP LOCATION NEW SLAB EXTENSION BETWEEN 1'-0" TO 1'-6")
E-11.00B
(REF:10 & 11/S314)

OTHERS NOT SHOWN FOR CLARITY

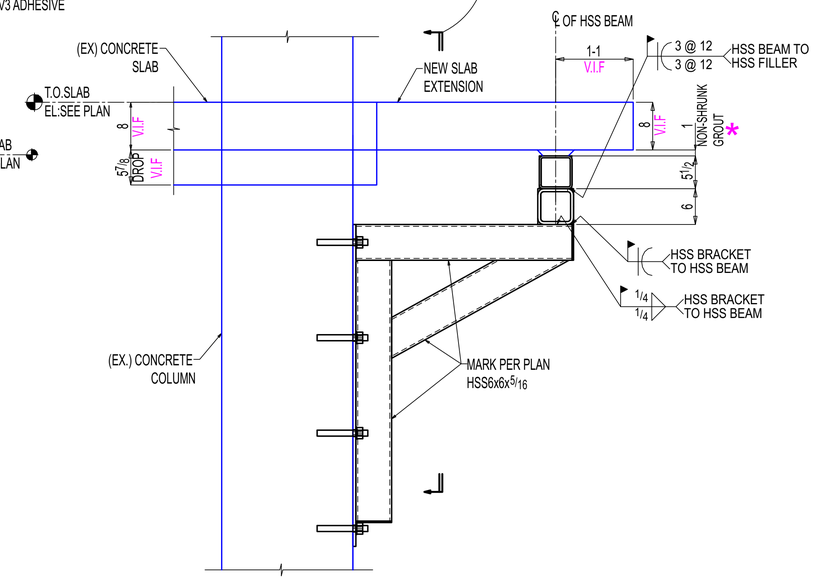

M-M

E-11.00A
(REF: 9/S315)

OTHERS NOT SHOWN FOR CLARITY

ERECTOR NOTE-1:
ADJUST HSS DEPTH IN FIELD BY CUT THE HSS TO MATCH EXISTING SLAB DROP THICKNESS, AND WELD TO THE TOP OF HSS FRAME AT SITE PRIOR TO EXISTING THE HSS FRAME.

SHOP / ERECTOR NOTE:
LOCATE EXISTING REBAR PRIOR TO FABRICATION OF PLATE. DO NOT DRILL THROUGH REBAR.

General Notes

*Structural steel shall conform to ASTM-A992.
*Structural SQR/RND.tubing conform to ASTM A500 Grade C
*Pipe shall conform to ASTM A53, Grade B.
*Channels, Angles and plates shall conform to A36.
*All bolts shall be 3/4" High strength in accordance with ASTM A325 (UNO)
*Welding Electrodes for Carbon steel :E70xx

# of Copies	Revision/ Issue	Destination	Date
2	B	For Re-Approval	10-24-2025
1	A	For Approval	09-19-2025

IRON FABRICATION SERVICES, LLC.

3029 M. Street, NW, Suite 202
Washington, DC 20007
Tel: 202-800-5599
Fax: 202-478-0303

Project Name and Address
MARYLAND AVENUE

Location: **1250 MARYLAND AVENUE SW WASHINGTON, DC 20024**

Contractor:
BALFOUR BEATTY

Approved for Fabrication by:	Signature

Contract # **224009**
Drawing # **E-11.04**
Contract Item: **LEVEL-05 SLAB EXTENSION**
Ref: **SOW-11: 3,4,5&6 / S307**
Date **01/ 20/ 2025**
Scale VARIES
Drawing Title: **SOW #11 LEVEL-05 NEW SLAB EXTENSION SUPPORT SECTIONS**

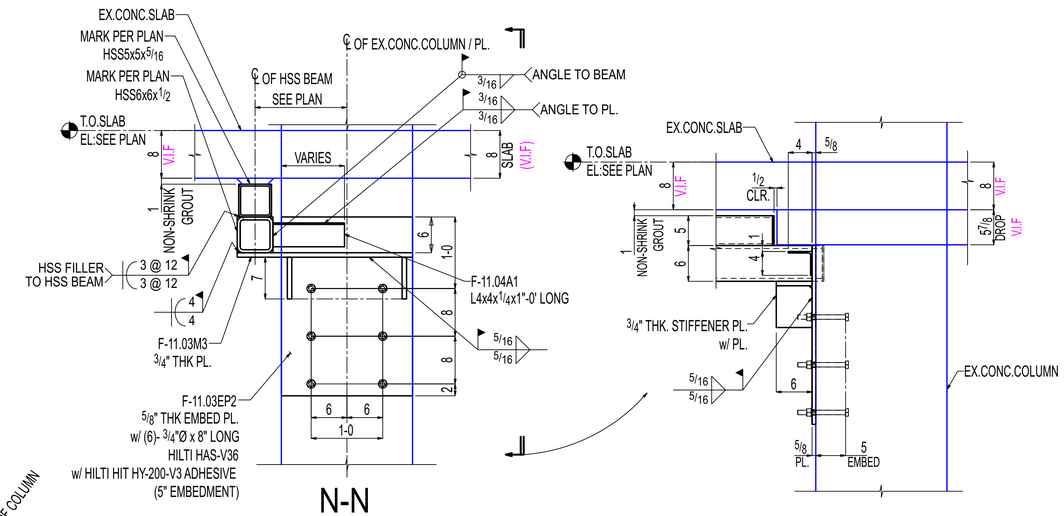

N-N

E-11.00A
(REF: 7/S316)

OTHERS NOT SHOWN FOR CLARITY

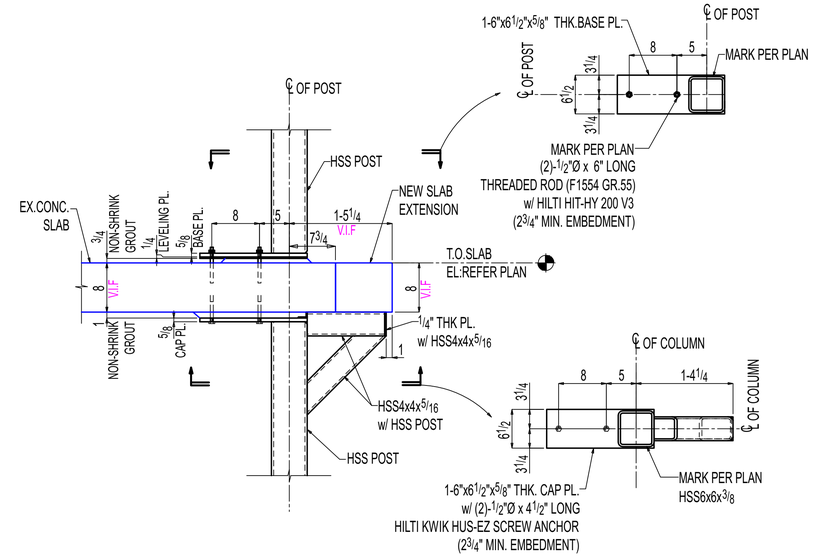

P-P

E-11.00A
(REF: 1/S317)

OTHERS NOT SHOWN FOR CLARITY

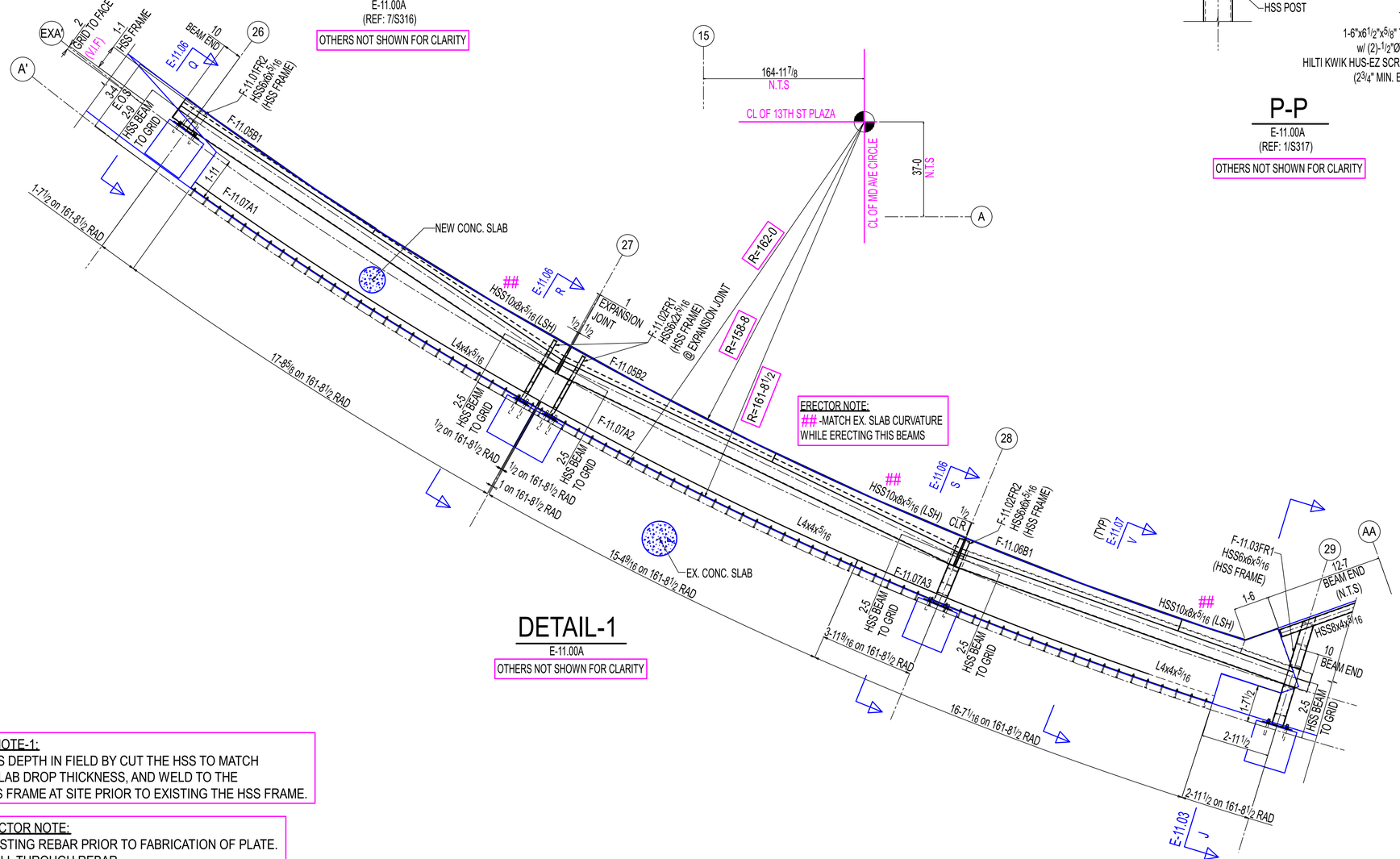

DETAIL-1

E-11.00A

OTHERS NOT SHOWN FOR CLARITY

ERECTOR NOTE:
-MATCH EX. SLAB CURVATURE WHILE ERECTING THIS BEAMS

ERECTOR NOTE-1:
ADJUST HSS DEPTH IN FIELD BY CUT THE HSS TO MATCH EXISTING SLAB DROP THICKNESS, AND WELD TO THE TOP OF HSS FRAME AT SITE PRIOR TO EXISTING THE HSS FRAME.

SHOP / ERECTOR NOTE:
LOCATE EXISTING REBAR PRIOR TO FABRICATION OF PLATE. DO NOT DRILL THROUGH REBAR.

General Notes

*Structural steel shall conform to ASTM-A992.
*Structural SQR/RND.tubing conform to ASTM A500 Grade C
*Pipe shall conform to ASTM A53, Grade B.
*Channels, Angles and plates shall conform to A36.
*All bolts shall be 3/4" High strength in accordance with ASTM A325 (UNO)
*Welding Electrodes for Carbon steel :E70xx

# of Copies	Revision/ Issue	Destination	Date
3	0	For Construction	11-14-2025
2	B	For Re-Approval	10-24-2025
1	A	For Approval	09-19-2025

IRON FABRICATION SERVICES, LLC.

3029 M. Street, NW, Suite 202
Washington, DC 20007
Tel: 202-800-5599
Fax: 202-478-0303

Project Name and Address
MARYLAND AVENUE

Location: **1250 MARYLAND AVENUE SW WASHINGTON, DC 20024**

Contractor:
BALFOUR BEATTY

Approved for Fabrication by:	Signature

Contract # **224009** Drawing # **E-11.05**

Contract Item: **LEVEL-05 SLAB EXTENSION**

Ref: **SOW-11: 3,4,5&6 / S307**

Date **01/ 20/ 2025**

Scale VARIES

Drawing Title: **SOW #11 LEVEL-05 NEW SLAB EXTENSION SUPPORT SECTIONS**

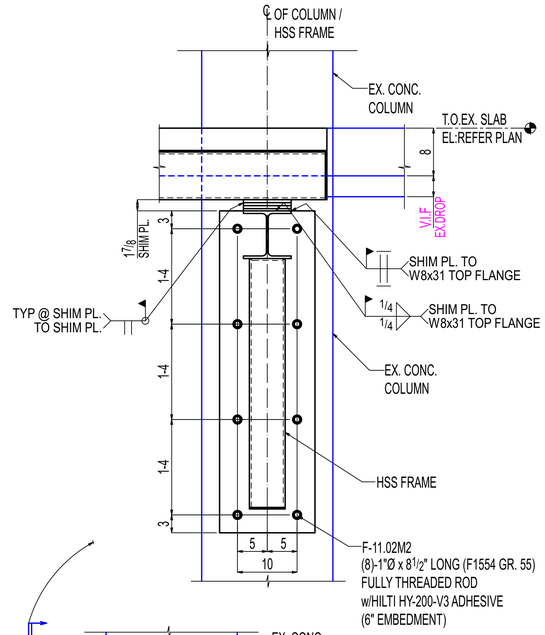

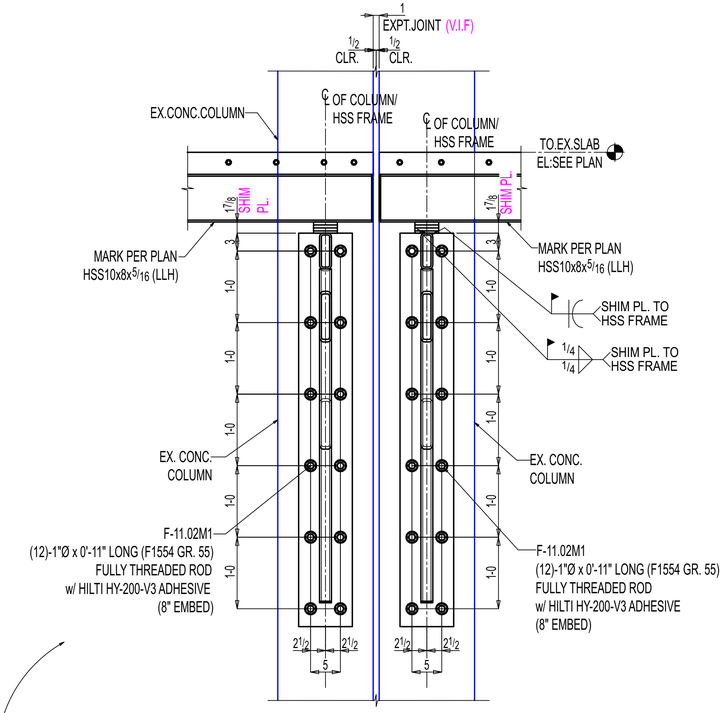

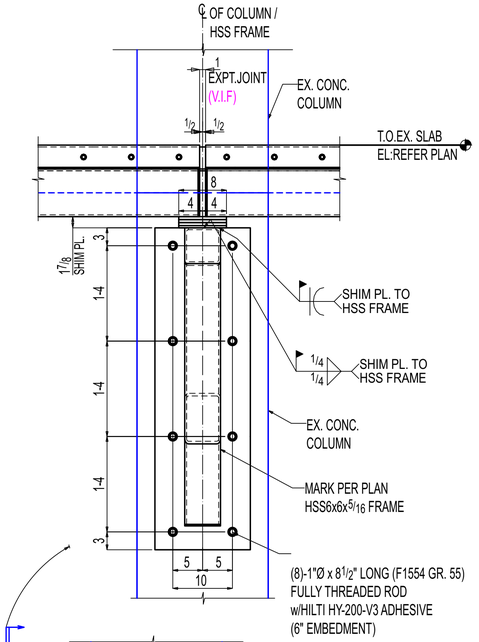

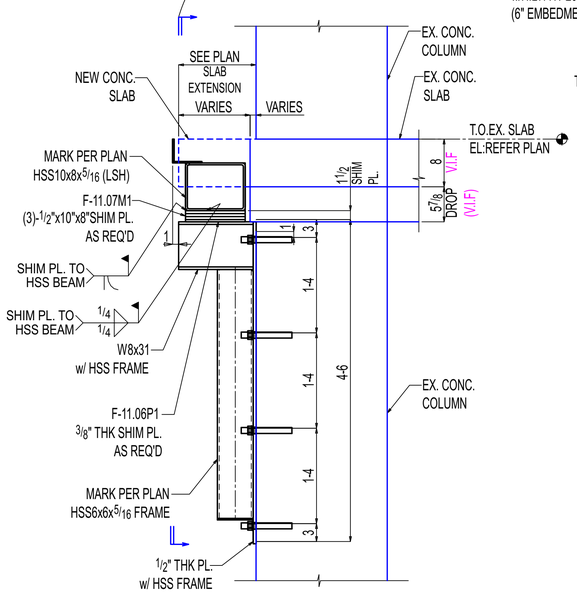

Q-Q
E-11.05
(REF:10 & 11/S314)
OTHERS NOT SHOWN FOR CLARITY

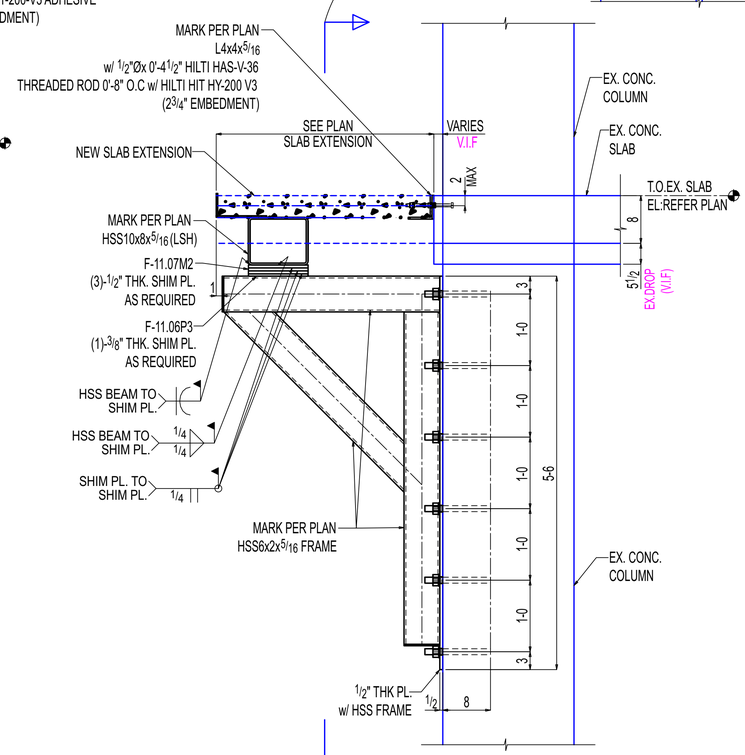

R-R
E-11.05
(REF: 5/S316)
OTHERS NOT SHOWN FOR CLARITY

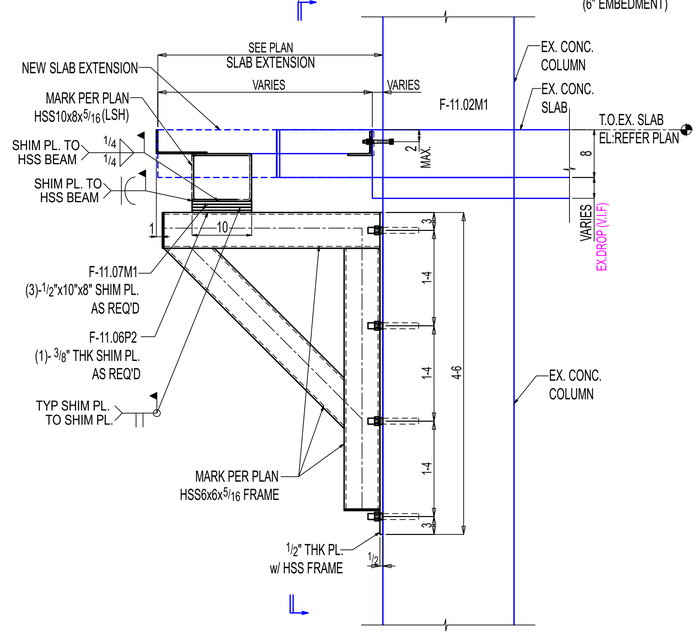

S-S
E-11.05
(REF: 4/S316)
OTHERS NOT SHOWN FOR CLARITY

SHOP / ERECTOR NOTE:
LOCATE EXISTING REBAR PRIOR TO FABRICATION OF PLATE.
DO NOT DRILL THROUGH REBAR.

General Notes

*Structural steel shall conform to ASTM-A992.
*Structural SQR/RND.tubing conform to ASTM A500 Grade C
*Pipe shall conform to ASTM A53, Grade B.
*Channels, Angles and plates shall conform to A36.
*All bolts shall be 3/4" High strength in accordance with ASTM A325 (UNO)
*Welding Electrodes for Carbon steel :E70xx

# of Copies	Revision/ Issue	Destination	Date
3	0	For Construction	11-14-2025
2	B	For Re-Approval	10-24-2025
1	A	For Approval	09-19-2025

IRON FABRICATION SERVICES, LLC.

3029 M. Street, NW, Suite 202
Washington, DC 20007
Tel: 202-800-5599
Fax: 202-478-0303

Project Name and Address
MARYLAND AVENUE

Location: **1250 MARYLAND AVENUE SW WASHINGTON, DC 20024**

Contractor:
BALFOUR BEATTY

Approved for Fabrication by:	Signature

Contract # **224009** Drawing # **E-11.06**

Contract Item: **LEVEL-05 SLAB EXTENSION**

Ref: **SOW-11: 3,4,5&6 / S307**

Date **01/ 20/ 2025**

Scale VARIES

Drawing Title: **SOW #11 LEVEL-05 NEW SLAB EXTENSION SUPPORT SECTIONS**

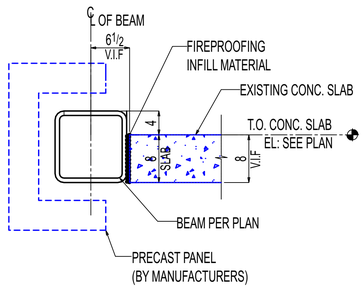

T-T

E-11.00
(REF: 5/S317)

OTHERS NOT SHOWN FOR CLARITY

NOTE:
1. PRECAST CONNECTION TO HSS BEAM BY PRECAST MANUFACTURER.

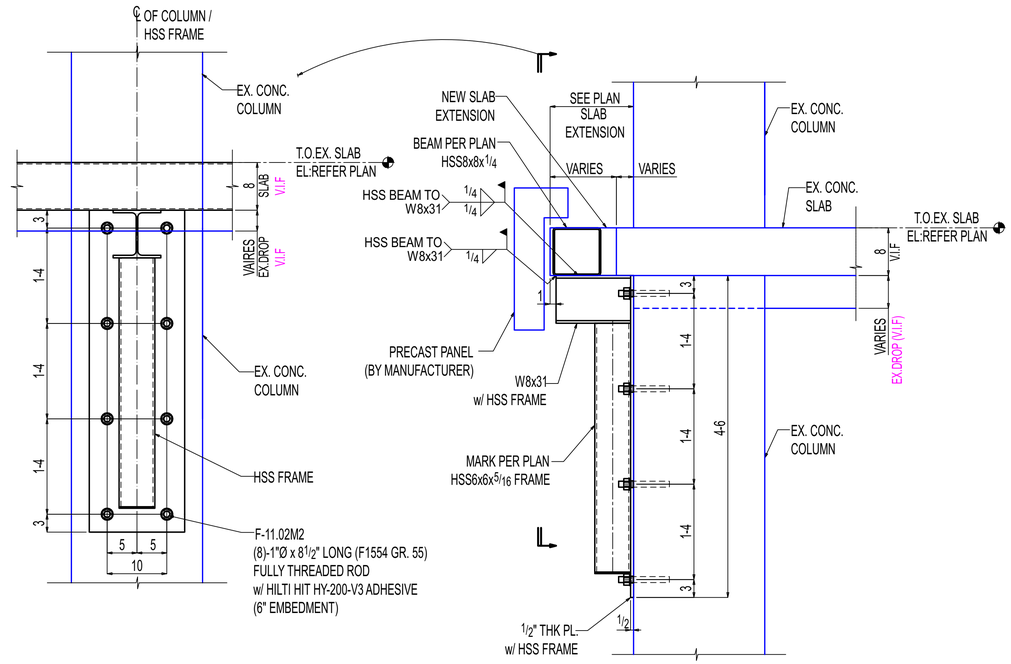

U-U

E-11.00
(REF: 3/S315)

OTHERS NOT SHOWN FOR CLARITY

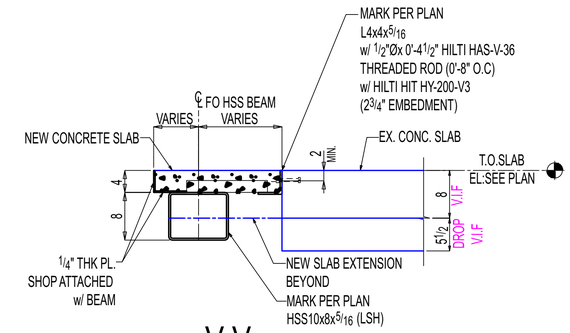

V-V

E-11.05
(REF: 8/S315)
(PRECAST SUPPORT AT NEW SLAB EXTENSION)

OTHERS NOT SHOWN FOR CLARITY

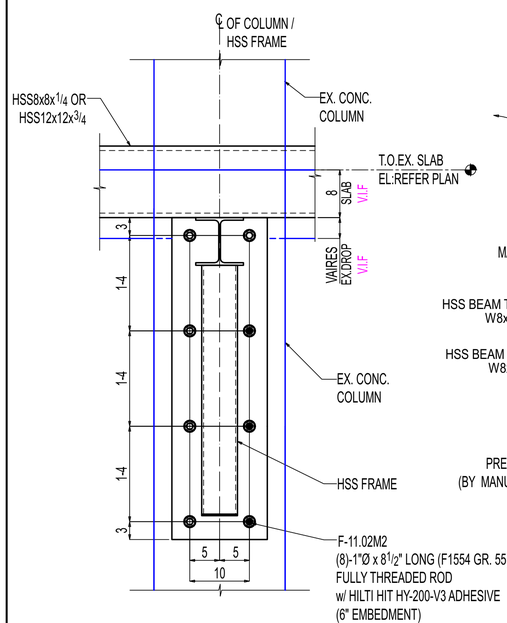

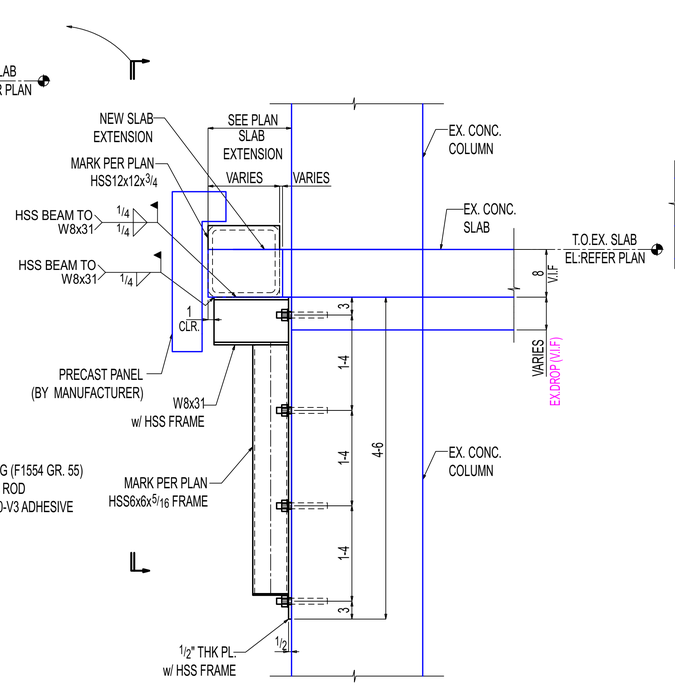

W-W

E-11.00
(REF: 5/S307)

OTHERS NOT SHOWN FOR CLARITY

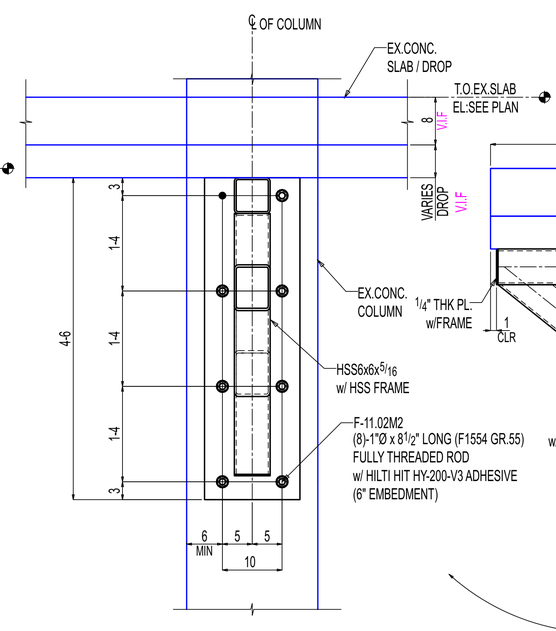

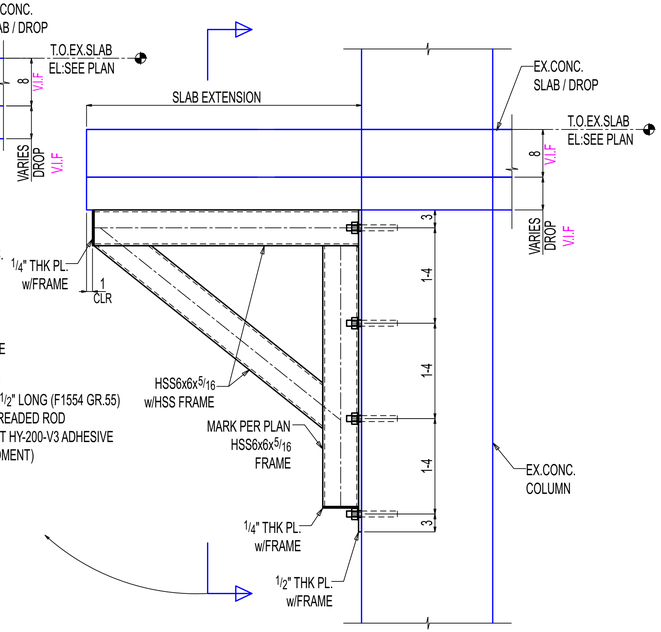

Y-Y

E-11.00
(REF:3/S307)

OTHERS NOT SHOWN FOR CLARITY

SHOP / ERECTOR NOTE:
LOCATE EXISTING REBAR PRIOR TO FABRICATION OF PLATE.
DO NOT DRILL THROUGH REBAR.

General Notes

*Structural steel shall conform to ASTM-A992.
*Structural SQR/RND.tubing conform to ASTM A500 Grade C
*Pipe shall conform to ASTM A53, Grade B.
*Channels, Angles and plates shall conform to A36.
*All bolts shall be 3/4" High strength in accordance with ASTM A325 (UNO)
*Welding Electrodes for Carbon steel :E70xx

# of Copies	Revision/ Issue	Destination	Date
3	0	For Construction	11-14-2025
2	B	For Re-Approval	10-24-2025
1	A	For Approval	09-19-2025

IRON FABRICATION SERVICES, LLC.

3029 M. Street, NW, Suite 202
Washington, DC 20007
Tel: 202-800-5599
Fax: 202-478-0303

Project Name and Address
MARYLAND AVENUE

Location: **1250 MARYLAND AVENUE SW WASHINGTON, DC 20024**

Contractor:
BALFOUR BEATTY

Approved for Fabrication by:	Signature

Contract # **224009** Drawing # **E-11.07**

Contract Item: **LEVEL-05 SLAB EXTENSION**

Ref: **SOW-11: 3,4,5&6 / S307**

Date **01/ 20/ 2025**

Scale VARIES

Drawing Title: **SOW #11 LEVEL-05 NEW SLAB EXTENSION SUPPORT SECTIONS**